CRISTINA

Spare Parts List

CRIFT95851 | Fractal Series | Chrome

How to request a replacement

Provide B&M with the complete SKU CRIFT95851, purchase details and photographs of the installed product and required component. Match the exact model and production revision before ordering.

Manufacturer reference	Selection
CRIAR24380Q00	Manufacturer reference
CRICF22096Q00	Manufacturer reference
CRICR17734Q00	Manufacturer reference
CRIFU24505P	Finish-dependent family
CRIMV22889P	Finish-dependent family
CRIMV24049P	Finish-dependent family
CRIMV7081P00	Manufacturer reference
CRIPI14681P	Finish-dependent family
CRIPZ24222P	Finish-dependent family

Finish and revision notes

References labelled as a finish-dependent family require the correct finish suffix. Select finish 51 Chrome only where the original sheet lists that finish. Do not order a different finish column or historical revision. Confirm the complete reference with B&M or Cristina before ordering.

Original manufacturer exploded view follows. Its component callouts, historical notes and finish qualifications are retained.

FRACTAL

SCHEDA RICAMBI | SPARE PARTS SHEET
rev.01_01/2025

CRIFT958

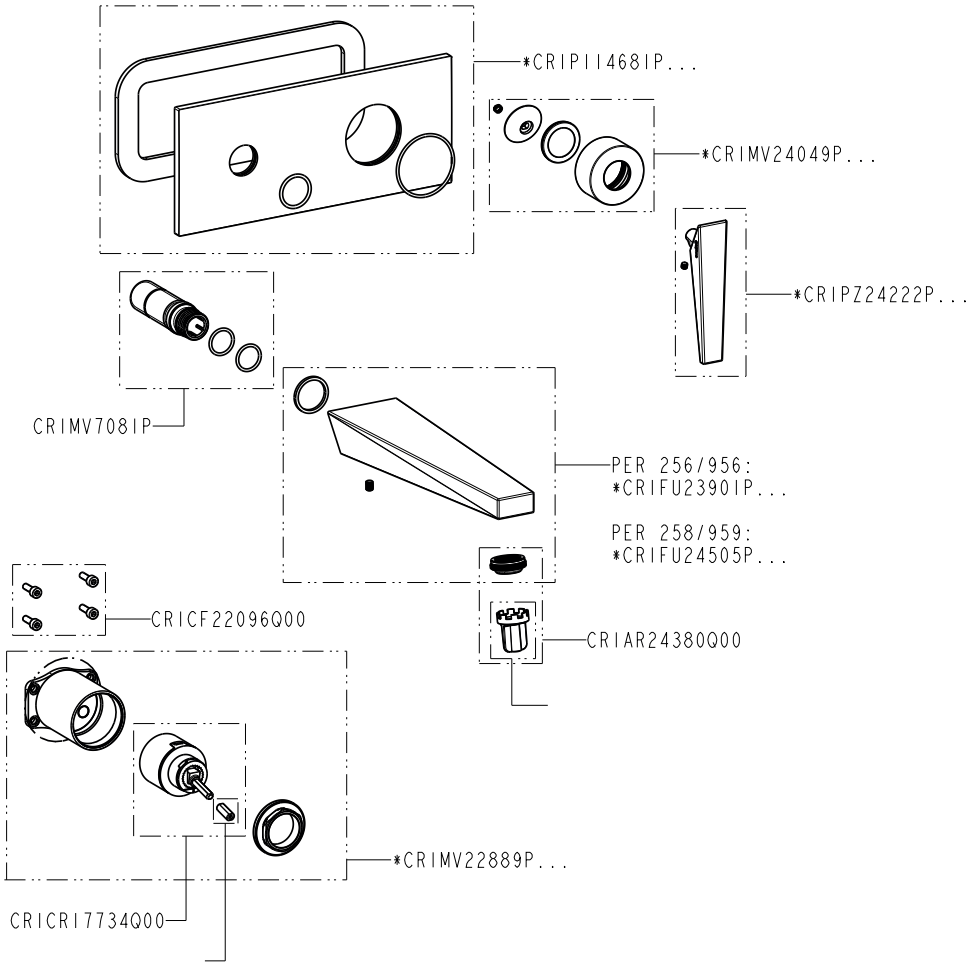

NOTE | NOTES

* completare con codice finitura | complete with finishing code

CRISTINA S.r.l. a socio unico
via G. Fava, 56 - 28024 Gozzano (NO) Italy - phone +39 0322 9545
fax +39 0322 956556 - info@cristinagroup.com
cristinarubinetterie.com

CRISTINA
RUBINETTERIE